PENTAIR JUNG PUMPEN

PUMP TECHNICAL SERVICES LIMITED

U2KS

DRAINAGE PUMPS

- Low level pumping with detached strainer
- Flushing device
- Emerged operation due to cooling jacket
- Veriable discharge branch
- EIP Technology
- Moisture sealed cable inlet

DESCRIPTION

The U2KS is a versatile centrifugal submersible pump for stationary and portable use. EIP technology for better solid handling, integrated flushing device for reducing deposits and optional low level pumping down to 5 mm are only a few of the innovative features that set this pump apart.

The pump removes rain water, lightly polluted water and all kinds of grey water like waste water from dishwashers, showers or washing machines.

In stationary use the U2KS removes the water from drains in cellars, laundries or storerooms and serves as a flood protection. If the sump or tank runs dry temporarily, the pump can be vented by providing a drill-hole in the spiral housing.

If submersible pumps are used outdoors, only a pump with 10 m cable without extension may be used in accordance with VDE Regulation 0100. For construction sites and garden ponds, a H07-type cable is mandatory.

PERFORMANCE

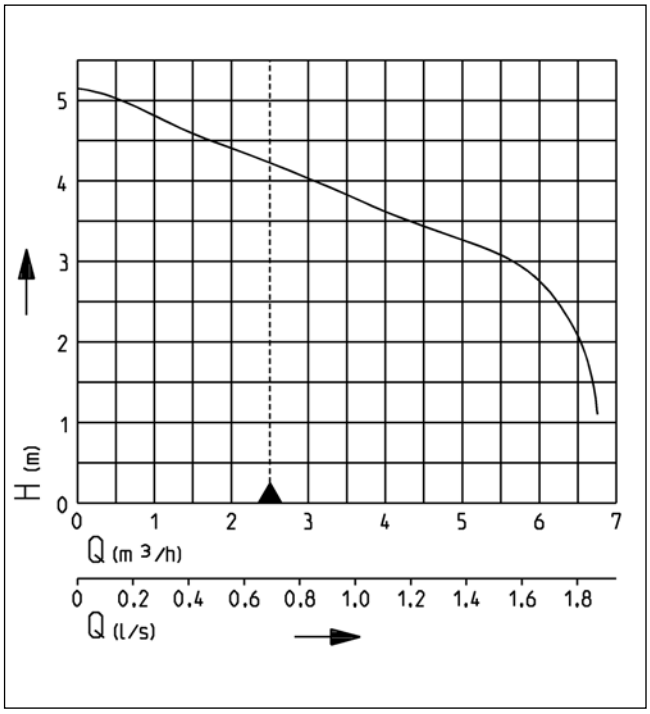

Type	Delivery head H [m]	1	2	3	4	5
U2KS	Flow rate Q [m^3/h]	6.8	6.5	5.5	3.0	0.5

We reserve the right to change specifications without notice. Pump performance is subject to ISO 9906 tolerances

The minimum flow velocity in the pressure piping must be 0.7 m/s according to EN 12056. This data is represented in the performance curve as a limit of application.

U2KS
DRAINAGE PUMPS

SCOPE OF SUPPLY

Pump ready to connect acc. to EN 12050 with 90°, 1 1/4" female connection elbow, cable and plug, with automatic level float switch.

MECHANICAL DATA

Pump	Vertical single-stage	Dry run protection	Yes
Free passage	10 mm	Shaft	Stainless steel
Bearing	Ball bearings, grease-lubricated	Impeller	Open centrifugal impeller, GFK
		Motor housing	Stainless steel
Seal on motor side	Rotary shaft seal	Pump housing	GRP
Oil chamber	Yes	Submersible	Yes
Seal on medium side	2-fold rotary shaft seals	Discharge branch	1 1/4"

ELECTRICAL DATA

Motor rating P1	0.3 kW	Insulation class	B
Motor rating P2	0.2 kW	Winding thermostat	Yes
Current	1.2 A	Motor protection	Integrated
Type of enclosure	IP 68	Plug	Safety

U2KS

Type	**Code No.**	Power line	Wires	Weight
U2KS, 10 m cable	**JP50026**	10m H07RN8-F	3G1,0	4.8 kg
U2KS, 4 m cable	**JP50025**	4m H05RN-F	3G0,75	3.8 kg

Dimensions and switching heights (mm)

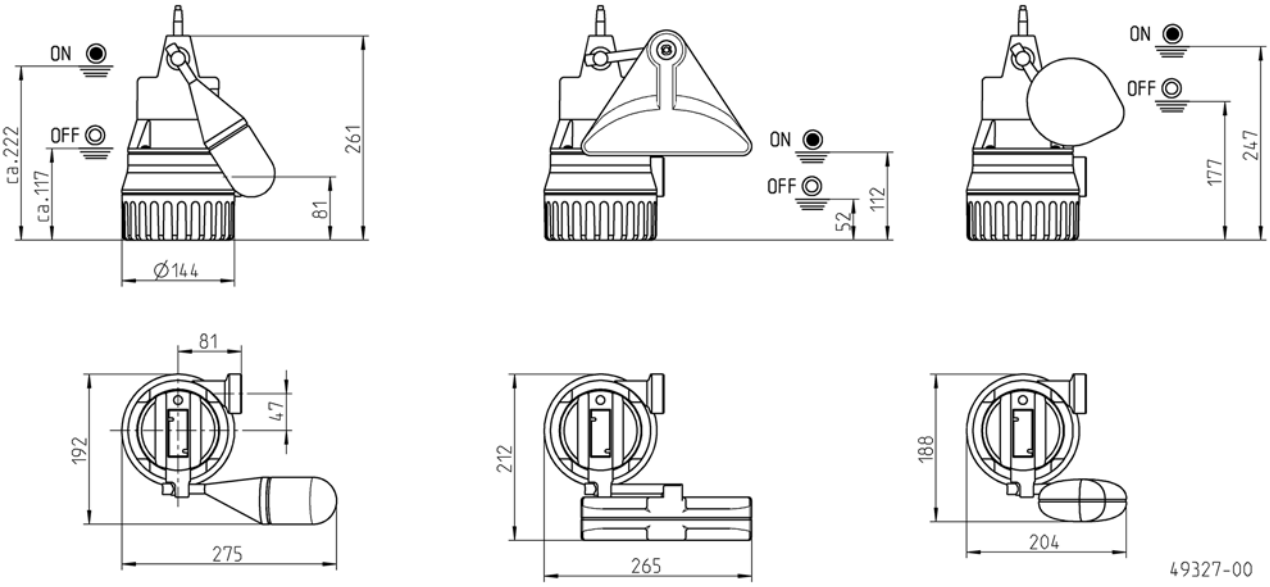

Mounting arrangement connection kid DN 32

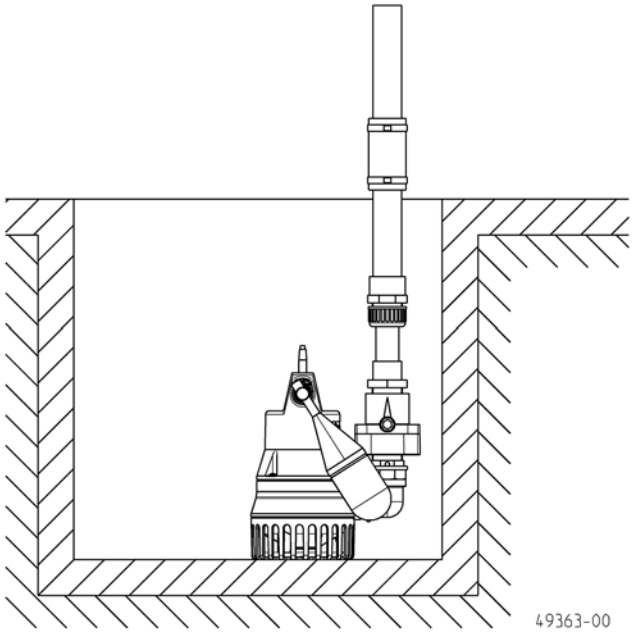

MECHANICAL ACCESSORIES

			Code No.
	① **Swing-type check valve**		
	R32 EN 12050-4	1¼" (DN 32), PN 4	**JP09739**
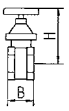	② **Stop-valve**	1¼" (DN 32), PN 16	**JP44785**
		1½" (DN 40), PN 16	**JP44786**
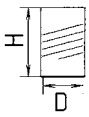	③ **Elastic connection**	1¼" (DN 32), PN 3	**JP44773**
	④ **Hose band clamp**	1¼"	**JP44765**
	⑤ **Hose coupling**		
	Hose coupling	1¼" (DN 32)brass, for transportable use	**JP00327**
	Hose connection	with swing-type check valve, 1¼" – 38/32/25	**JP50040**
	⑥ **Hose set**	1¼" (DN 32), 15 m mit Winkel und Tüllen	**JP43550**
	⑦ **Special float**	for low switching points	**JP44795**
		for narrow chambers (mind. 30x30 od Ø30 cm)	**JP40856**
	Float fixation	for continuous pump operation	**JP42175**
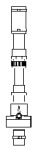	⑧ **Pipe work connection set**	DN 32, with telescopable pressure pipe 30-90 cm	**JP44609**

ELECTRICAL ACCESSORIES

Alarm unit			Code No.
	PTS.SA1	Level alarm system with battery backup 320x240x150mm (WxDxH)	PTS.SA1
	PTS.HLA	High Level alarm unit. 182x180x111mm (HxWxD)	PTS.HLA
	Power Isolation Alarm	Isolate appliance - in event of alarm no more water will be fed into the alarm system	P734